Control Options (for prioAir 6EC, PrioAir 8EC, and PrioAir 10EC models)

Maximum Speed
Place Jumper Wire from +10V to 0-10V

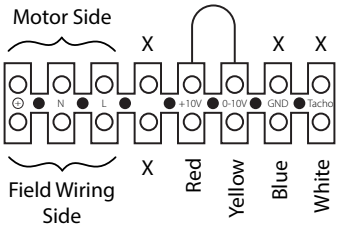

Typical Remote Potentiometer

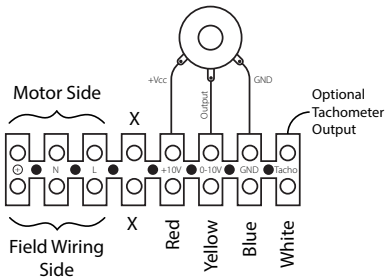

MTP10
Item# 32731

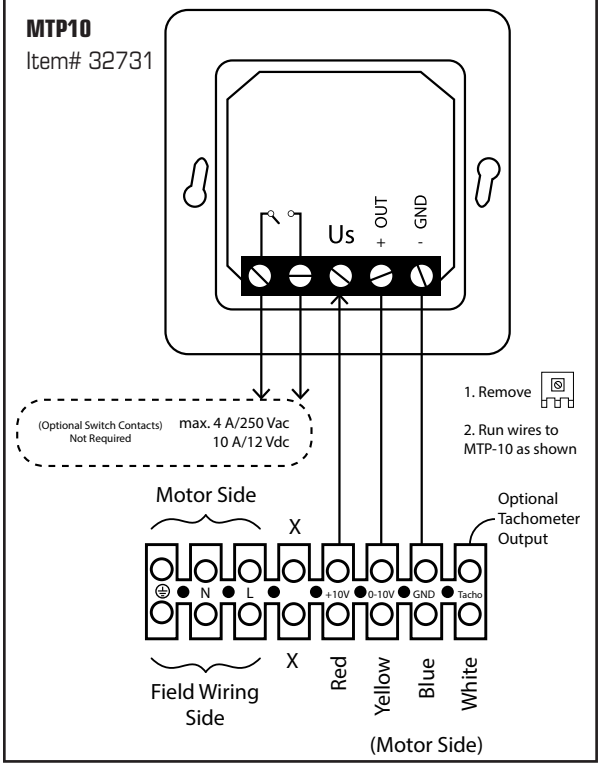

External DC Voltage Speed Control
Using a computer controlled variable voltage of 0 to 10Vdc.
(For automated buildings)

1-10Vdc = Variable Speed
10Vdc = Max Speed
1 Vdc = Min. Speed
Less than 1 Vdc = OFF

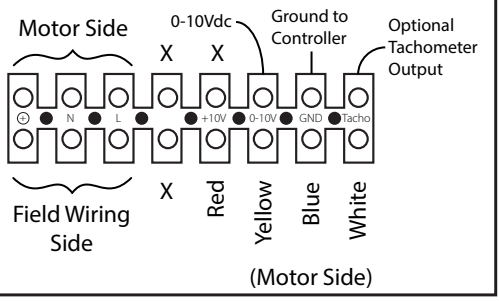
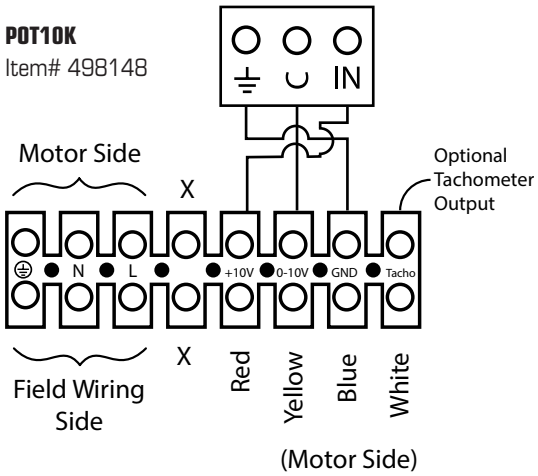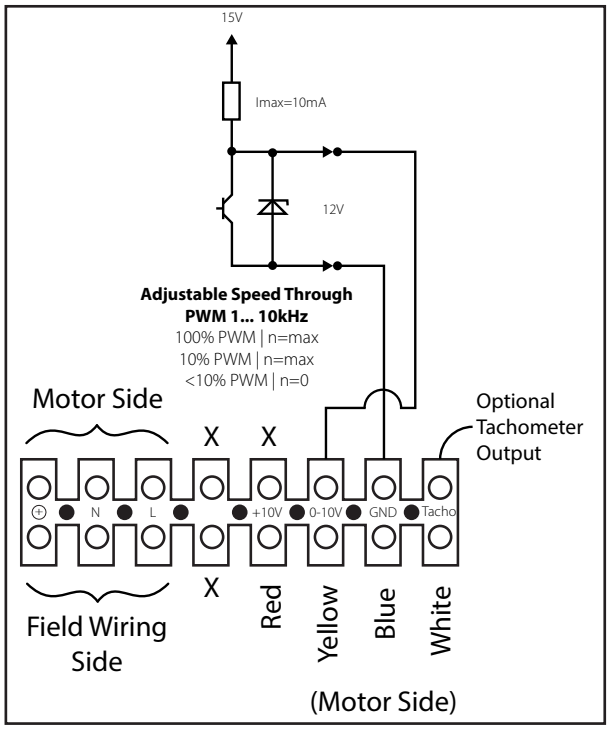
POT10K
Item# 498148